Temple Winds Capital
IPTW010 EconPolymer™

Martin Richards Design™
COLLECTION

Total
Height
10”
25.4cm

Bottom Circle 7-7/8” (20cm)

13-5/8”
34.6cm

Inside
3-7/8”
9.84cm

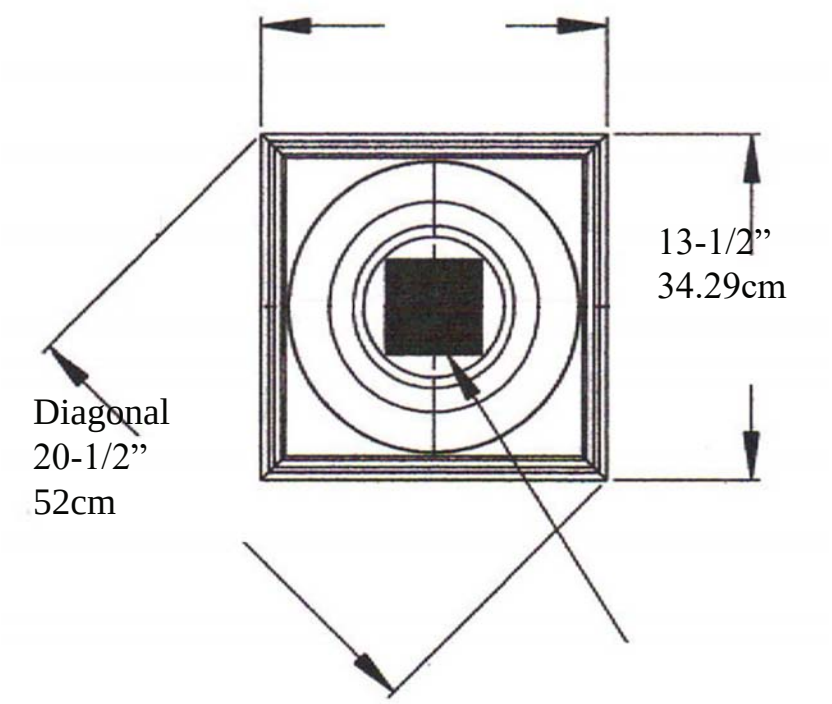

13-1/2”
34.29cm

Diagonal
20-1/2”
52cm

* All specifications subject to change without notice,
Final products & Measurements may vary from this brochure Manufacturing tolerences +- 1/8” (.31cm)

www.imperialproductions.com
Imperial Productions & Distribution Inc Toronto / New York
email sales@imperialproductions.com
copyright 2016 MRDCI All Rights Reserved

1-800-399-7585

Fall 2018